CK Model (110-240VAC)

Snap + Screw

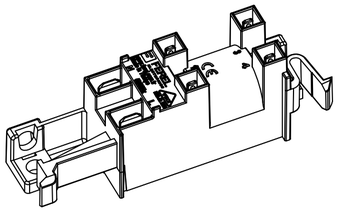

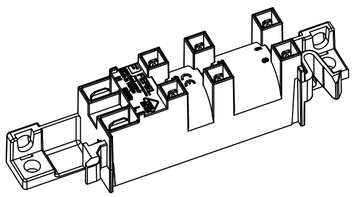

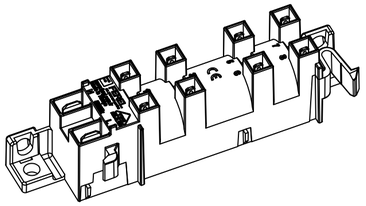

CT Model (220-240VAC)

Snap + Screw

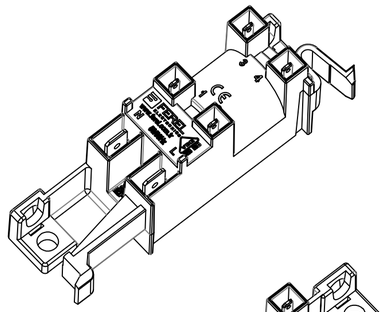

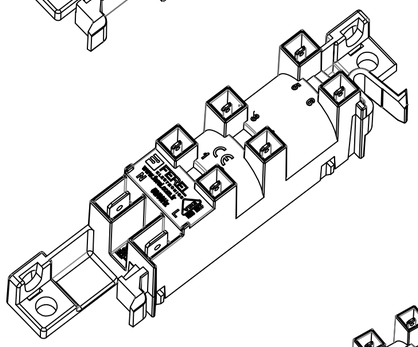

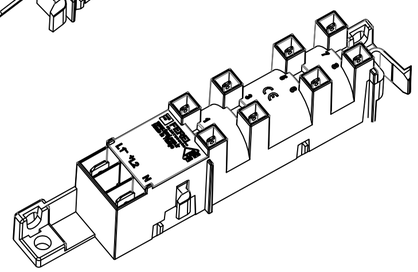

Snap

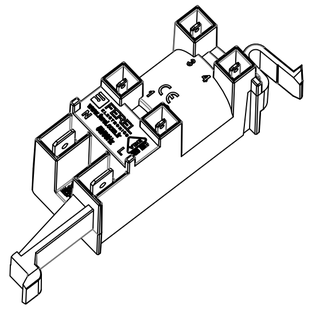

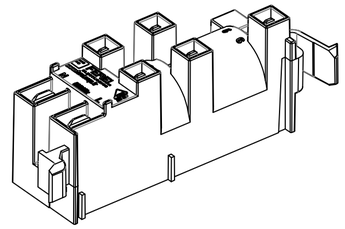

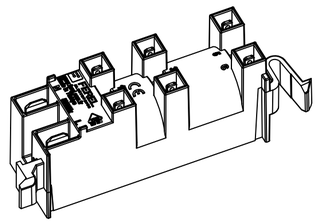

Snap + Screw
FEREL LOGOSUZ

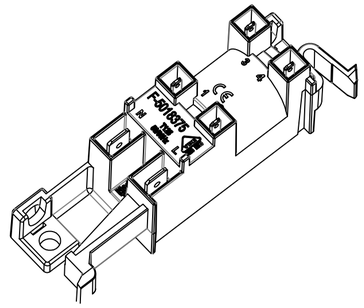

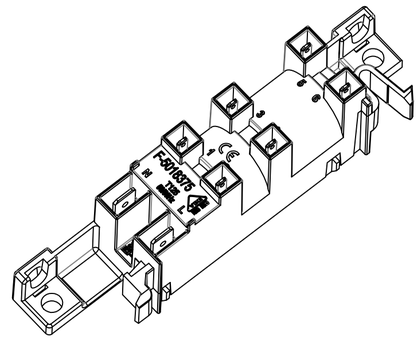

Snap With Cover

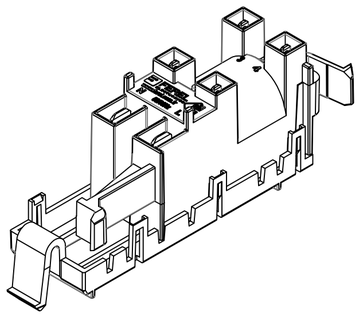

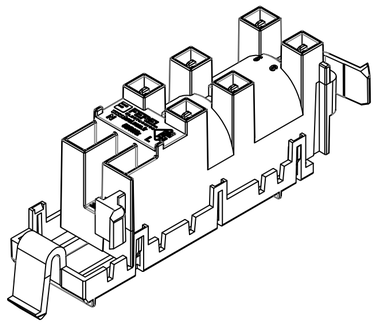

FEREL ELECTRONICS		Document No	4				Scale 1/1
			3				
Drawer	Control	Approval	2			Description	MİNYATÜR ÇAKMAK
			1				
			0	First issue / İlk Yayın			
			No	Revised	Rev.date	Name	